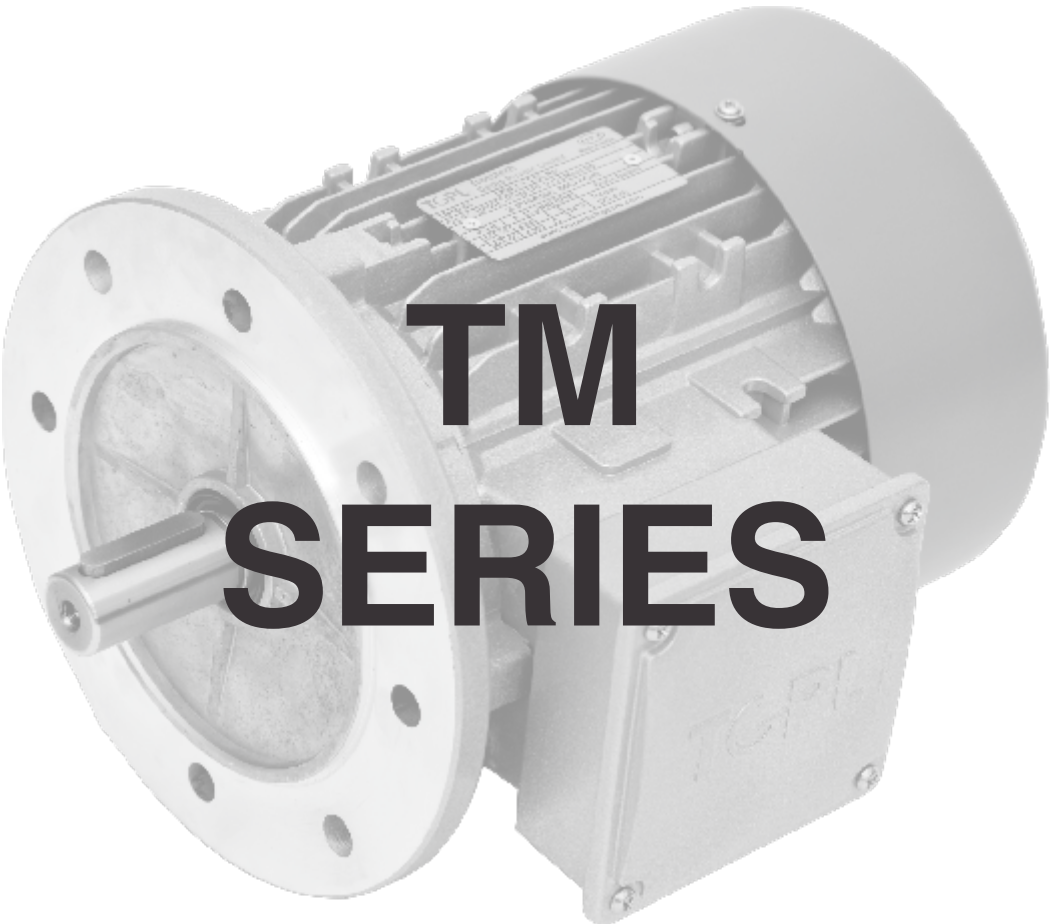

TM SERIES

1. INTRODUCTION

Transtech Gears manufactures three phase asynchranous motors from 63 frame size to 112 frame in 4 pole and confirm to efficiency class **IE2**

2. ELECTRICAL TOLERANCE

Values for	Tolerance
Efficiency η – machines up to and include 50 kW	-0.15 (1 – η)
Power-factor, cosφ , for induction motors	-(1-cosφ)/6 Minimum absolute value 0.02 Maximum absolute value 0.07
Slip of induction motors (at full load and at working temperature) P_N < 1 kW P_N ≥ 1 kW	 ±30% of the slip ±20% of the slip
Locked rotor current of cage induction motors	+20% of the current
Locked rotor torque of cage induction motors	-15% and +25% of the torque
Breakdown torque of induction motors	-10%
Moment of inertia	±10% of the value

3. MECHANICAL TOLERANCE

Component	Code	Dimensions	Tolerance
Shaft End	D - DA	Ø11 to 28	j6
Key	F - FA		h9
Flange	N	Ø < 250	j6
		Ø ≥ 250	h6

4. VOLTAGE & FREQUENCY

The motors are suitable for 415 Voltage ±10%, Frequency 50Hz ± 5% with 3 phase in Star connection.

The motors are suitable for 240 Voltage ±10%, Frequency 50Hz ± 5% with 3 phase in delta connection.

5. INSULATION

The motor insulating materials (Enameled wire, Surface insulation treatments & impregnation type) are provided with class F & temperature rise limited to class B.

6. TYPE OF DUTY

S1 Duty (Continuous Duty) – The motor operated under rated condition continuously.

7. AMBIENT TEMPERATURE

All motors in our standard design are suitable for an ambient temperature from -15° C to + 50° C and altitude above sea level ≤ 1000m. Motors can be used at ambient temperatures from 50°C to 60°C as long as the derating factors listed as below table are applied:

Ambient temperature (°C)	50°	55°	60°
% of rated power	100%	95%	90%

8. BEARINGS

All motors are fitted with life lubricated radial ball bearings and the types of bearings in use are listed in the below table.

FRAME SIZE	DRIVE END	NON-DRIVE END (FAN SIDE)
63	6201-2Z/C3	6201-2Z/C3
71	6202-2Z/C3	6202-2Z/C3
80	6204-2Z/C3	6204-2Z/C3
90	6205-2Z/C3	6205-2Z/C3
100	6206-2Z/C3	6206-2Z/C3
112	6207-2Z/C3	6207-2Z/C3

9. PROTECTION CLASS

Motors are designed with standard IP55 protection class. For outdoor installation, motors has to be protected from direct sunlight and if mounted vertically with shaft downwards, The rain canopy must be provided.

IP	5	5

0		No special protection
1	Ø 50 mm 	Protection against solid foreign bodies having ≥ 50 mm Ø
2	Ø 12 mm 	Protection against solid foreign bodies having ≥ 12.5 mm Ø
3	Ø2.5 mm 	Protection against solid foreign bodies having ≥ 2.5 mm Ø
4	Ø1 mm 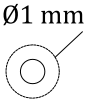	Protection against solid foreign bodies having ≥ 1 mm Ø
5		Protected against dust
6		Dust-tight

0		No special protection
1	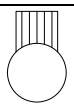	Protected against vertical water drips
2	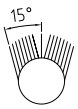	Dripping water (15° tilted)
3	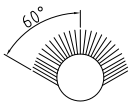	Protected against spraying water
4	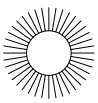	Protected against splashing water
5	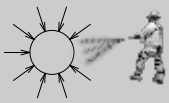	Protected against jetting water
6	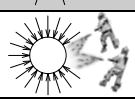	Protected against powerful jetting water
7	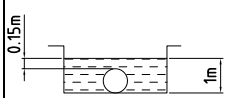	Protected against temporary immersion
8	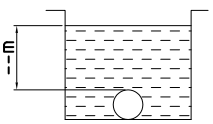	Protected against continuous immersion

10. CONNECTION DIAGRAMS

STAR CONNECTION

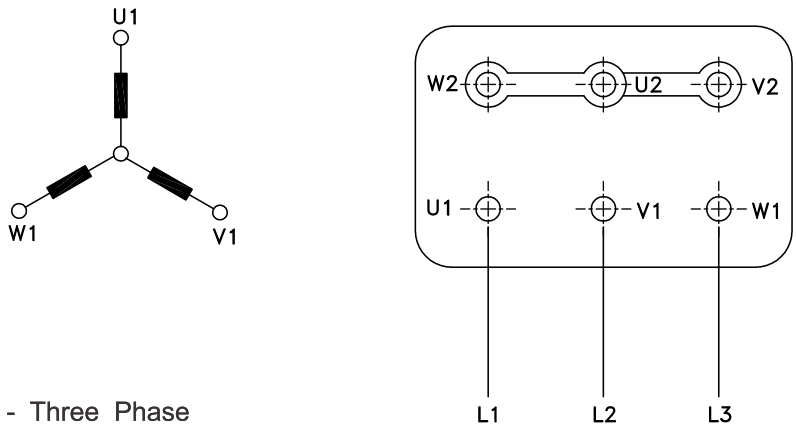

Input - Three Phase
415 volts / 50Hz

DELTA CONNECTION

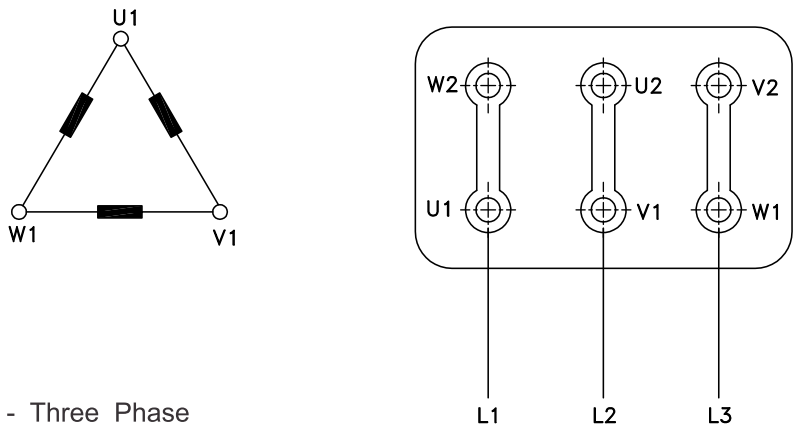

Input - Three Phase
240 volts / 50Hz

11. BRAKE DETAILS

The brake motors are fitted with DC type fail safe brake with a brake power supply of 240V ± 10% or 415V ± 10%.

PRINCIPLE OF OPERATION : When electric current is given to the brake coil the armature plate is attracted to the stator against the spring force, thus releasing the rotor. When current is cut off, strong compression springs push the armature plate back to its original position, which clamps the friction plate providing the braking torque.

12. MOUNTING POSITIONS

FLANGE MOUNT			FLANGE AND FOOT MOUNT		
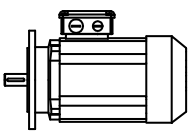	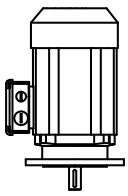	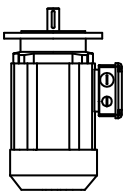	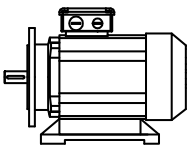	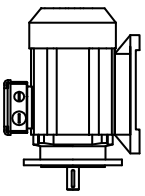	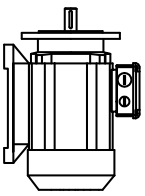
IM - B5	IM - V1	IM - V3	IM - B3 / B5	IM - V5 / V1	IM - V6 / V3

SHORT (FACE) MOUNT			SHORT (FACE) AND FOOT MOUNT		
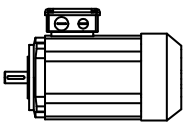	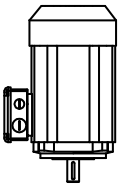	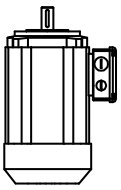	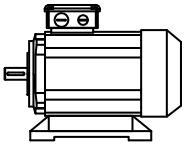	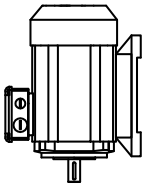	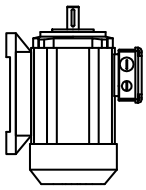
IM - B14	IM - V18	IM - V19	IM - B3 / B14	IM - V5 / V18	IM - V6 / V19

FOOT MOUNT					
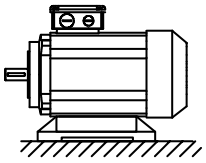	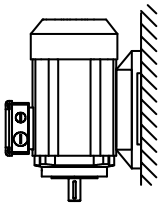	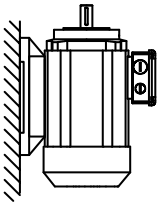	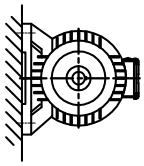	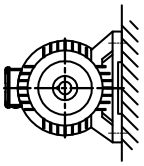	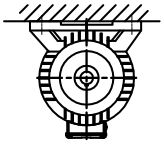
IM - B3	IM - V5	IM - V6	IM - B6	IM - B7	IM - B8

13. MODEL DESIGNATION

TM63 B	4	B5	DCB	SPL. OPTIONS
MOTOR SIZE	**Number Of Poles**	**Mounting**	**DC Brake**	
TM63B (or) TM71A (or) TM71B (or) TM80A (or) TM80B (or) TM90S (or) TM90L (or) TM100L (or) TM112M	4 Pole	B5 - Flange (or) B14 - Short Flange (or) B3 - Foot (or) B3 / B5 - Foot With Flange (or) B3 / B14 - Foot with Short Flange	190 DC Volts with Release Lever	Option - 1 TB - 1 (or) TB - 2 (or) TB - 3 (or) TB - 4 Option - 2 - D-ES Option - 3 - N-ES Option - 4 - FC

Option - 1 : Terminal Box Position

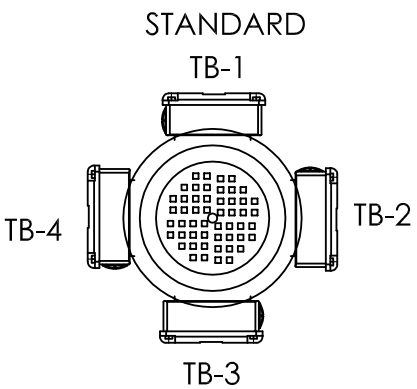

Option - 2 : Driven Side Extension Shaft (**D-ES**)

Option - 3 : Non Driven Side Extension Shaft (**N-ES**)

Option - 4 : Forced Cooling Fan (**FC**)

14. 3 PHASE SQUIRREL CAGE INDUCTION MOTOR ELECTRICAL PERFORMANCE CHART FOR 4 POLE - IE2

Degree of Protection IP55, Insulation Class 'F', With Temperature Rise Limited to Class B, Duty S1, Ambient Temperature 50°C
Version as per IS: 12615 / IEC : 60034 - 1

Model	Rated Output		Frame Size	Pole	Rated Speed At 50Hz	Rated Current At 415V,50Hz	Rated Current At 240V,50Hz	Efficiency (100%)	Efficiency (75%)	Power Factor	Rated Torque	Locked Rotor Current / Rated Current	Break Down Torque / Rated Torque	Locked Rotor Torque / Rated Torque	GD^2 of Rotor	IM B5 Motor Weight	DC Brake Motor	DC Brake Torque
	HP	KW			RPM	A	A	%	%	cosφ	Nm	Is/In	Ms/Mn	Ma/Mn	$kgfm^2$	Kg	Model	Nm
TM 63 B4	0.25	0.18	63	4	1370	0.6	1.1	67	65.3	0.7	1.31	5	2.9	2.6	0.0012	4.4	TM63 B4 DCB	4
TM 71 B4	0.5	0.37	71	4	1400	1.1	1.6	70.1	70.1	0.74	2.5	5.5	2.75	2.6	0.0033	6.9	TM71 B4 DCB	8
TM 80 A4	0.75	0.55	80	4	1410	1.4	2.2	75.1	75.1	0.75	3.75	5.5	2.75	2.6	0.01	10	TM80 A4 DCB	16
TM 80 B4	1	0.75	80	4	1420	1.7	2.9	79.6	79.6	0.78	5.1	6	2.75	2.6	0.0112	10.7	TM80 B4 DCB	16
TM 90 S4	1.5	1.1	90	4	1410	2.4	4.3	81.4	81.4	0.8	7.8	5.7	2.75	2.5	0.0122	13.2	TM90 S4 DCB	20
TM90 LA4	2	1.5	90	4	1410	3.2	5.4	82.8	82.8	0.8	10	5.7	2.75	2.6	0.0148	15.6	TM90 LA4 DCB	20
TM100 LA4	3	2.2	100	4	1420	4.5	7.8	84.3	84.3	0.8	15	6	2.75	2.8	0.0237	19.8	TM100 LA4 DCB	40
TM112 M4	5	3.7	112	4	1430	7.3	12.4	86.3	86.3	0.82	24	6	2.75	2.6	0.0518	31.2	TM112 M4 DCB	60

63 Frame Size is not as per IE-2 Standard

15. OUTLINE DIMENSIONS

B5

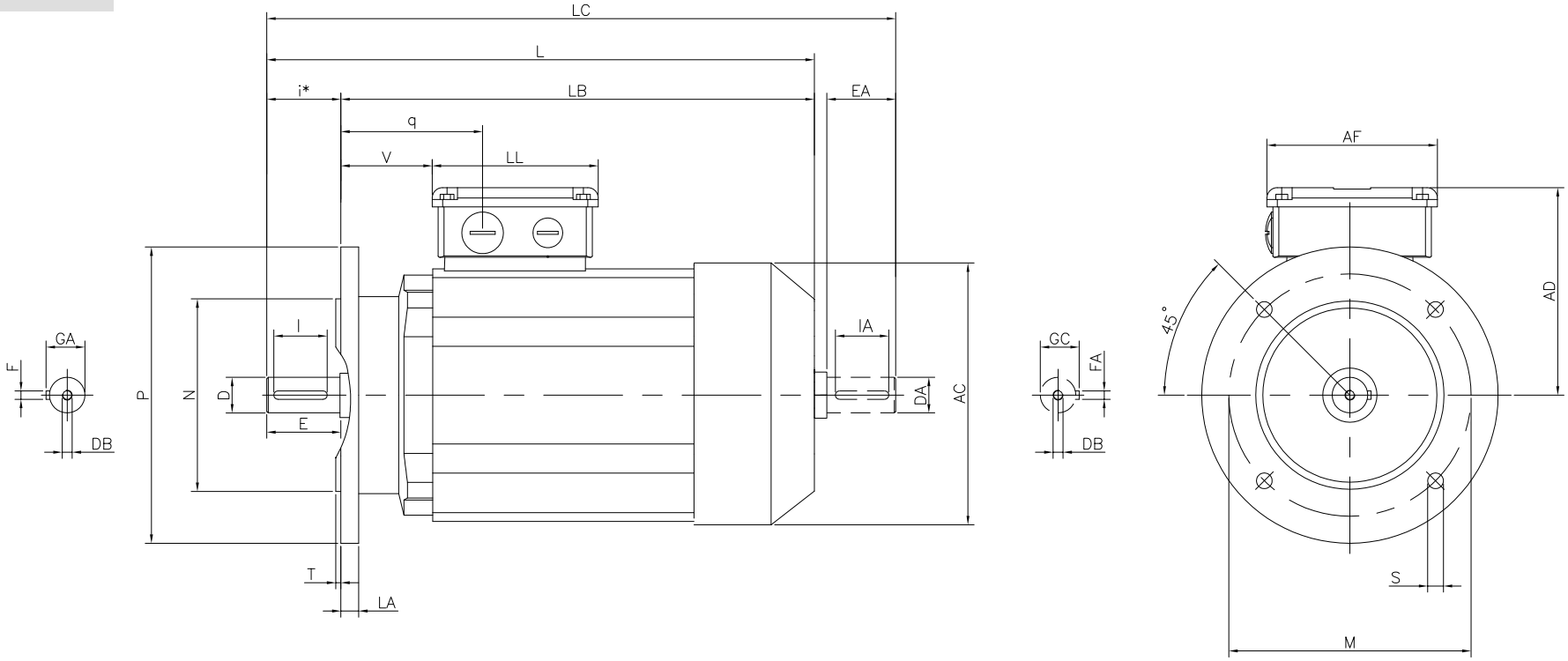

MECHANICAL DIMENSIONS (FLANGE MOUNTED MOTORS- B5)

Frame	FLANGE							SHAFT						OVERALL DIMENSIONS								
	N	M	P	S	T	i*	LA	D DA	E EA	GA GC	F FA	DB	I IA	AC	L	LB	LC	AD	LL	V	q	AF
TM 63	95	115	140	9	3	23	10	11	23	12.5	4	M4	18	120	207	184	235	98	89	17	46	89
TM 71	110	130	160	9	3.5	30	10	14	30	16	5	M5	25	139	230	200	266	109	89	23.5	53	89
TM 80	130	165	200	11.5	3.5	40	11.5	19	40	21.5	6	M6	35	156	267	224	312	131	106	23	58	106
TM 90 S	130	165	200	11.5	3.5	50	11.5	24	50	27	8	M8	40	172	292	242	347	136	106	25.5	60	106
TM 90 L	130	165	200	11.5	3.5	50	11.5	24	50	27	8	M8	40	172	315	265	370	136	106	25.5	60	106
TM 100	180	215	250	14	4	60	14	28	60	31	8	M10	50	196	372	297	437	145	106	32.5	69	106
TM 112	180	215	250	14	4	60	15	28	60	31	8	M10	50	216	380	316	445	154	106	36	70	106

Note : i Tolerance fi up to length 85 mm ± 1mm Over 85 mm ± 1.5mm

B14

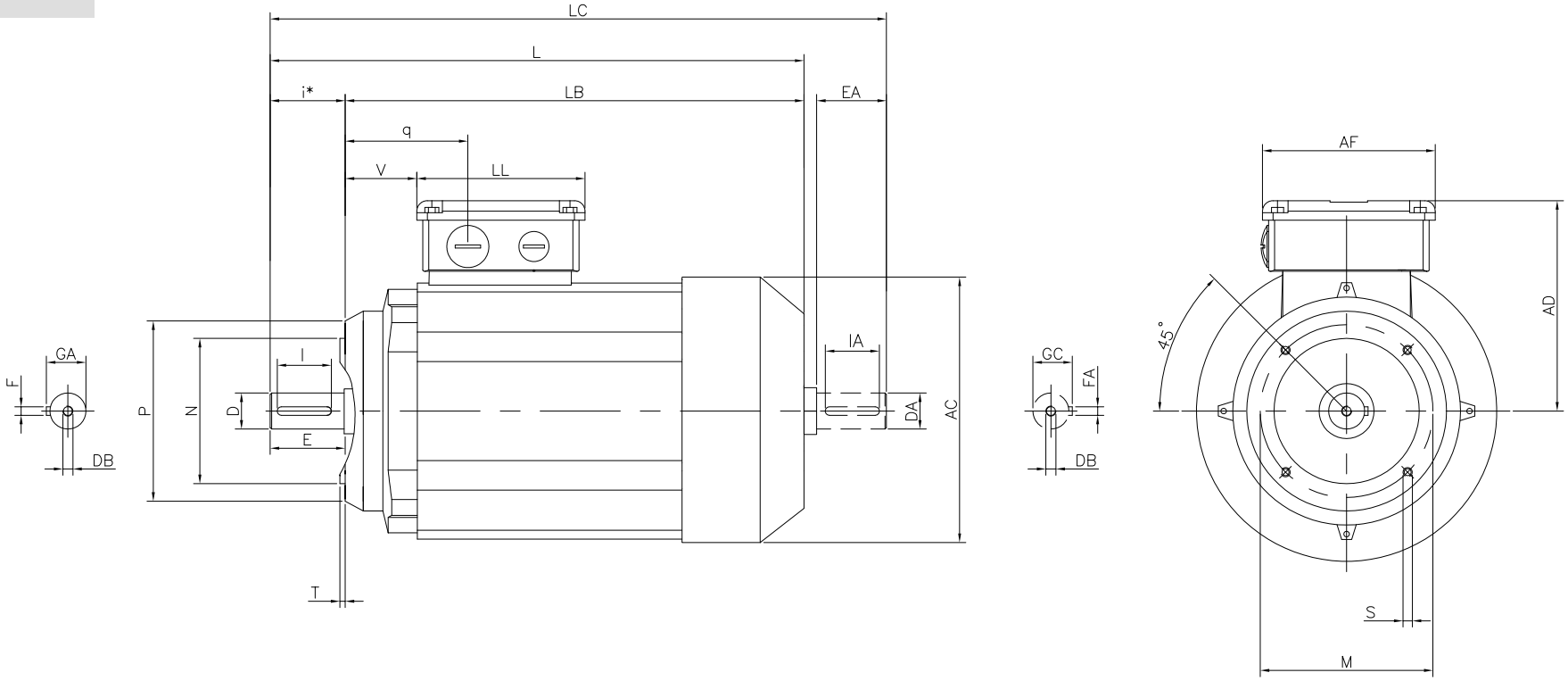

MECHANICAL DIMENSIONS (FLANGE MOUNTED MOTORS- B14)

Frame	FLANGE						SHAFT						OVERALL DIMENSIONS								
	N	M	P	S	T	i*	D DA	E EA	GA GC	F FA	DB	I IA	AC	L	LB	LC	AD	LL	V	q	AF
TM 63	60	75	90	M5x8	2.5	23	11	23	12.5	4	M4	18	120	207	184	235	98	89	17	46	89
TM 71	70	85	105	M6x10	2.5	30	14	30	16	5	M5	25	140	230	200	266	109	89	23.5	53	89
TM 80	80	100	120	M6x12	3	40	19	40	21.5	6	M6	35	156	267	224	312	131	106	23	58	106
TM 90 S	95	115	140	M8x15	3	50	24	50	27	8	M8	40	172	292	242	347	136	106	25.5	60	106
TM 90 L	95	115	140	M8x15	3	50	24	50	27	8	M8	40	172	315	265	370	136	106	25.5	60	106
TM 100	110	130	160	M8x15	3.5	60	28	60	31	8	M10	50	198	372	297	437	145	106	32.5	69	106
TM 112	110	130	160	M8x17	3.5	60	28	60	31	8	M10	50	217	380	316	445	154	106	36	70	106

Note : i Tolerance fi up to length 85 mm ± 1mm Over 85 mm ± 1.5mm

B3

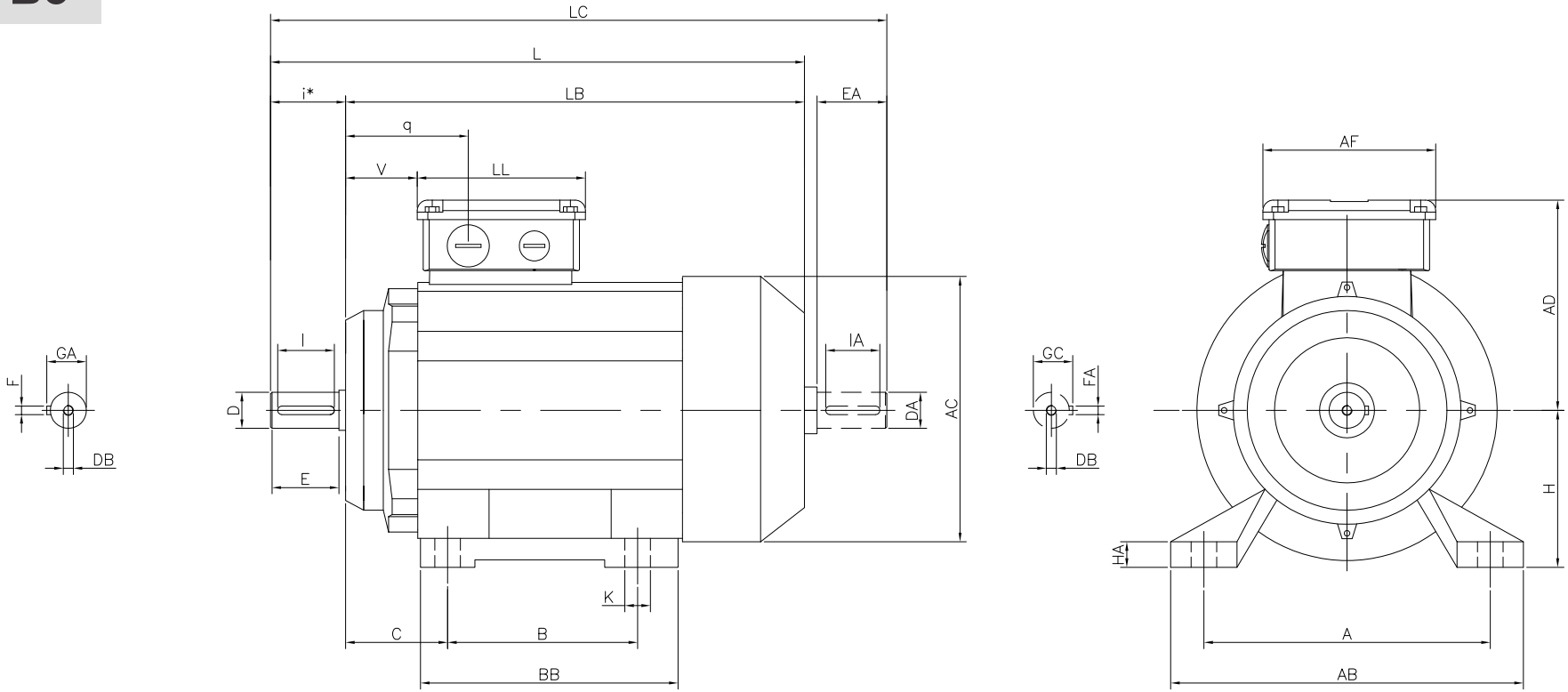

MECHANICAL DIMENSIONS (FOOT MOUNTED MOTORS- B3)

	FOOT									SHAFT						OVERALL DIMENSIONS								
Frame	A	B	HA	BB	AB	K	C	i*	H	D DA	E EA	GA GC	F FA	DB	I IA	AC	L	LB	LC	AD	LL	V	q	AF
TM 63	100	80	9.3	105	125	8	40	23	63	11	23	12.5	4	M4	18	120	207	184	235	98	89	17	46	89
TM 71	112	90	9.5	108	140	8	45	30	71	14	30	16	5	M5	25	140	230	200	266	109	89	23.5	53	89
TM 80	125	100	13	125	154	10.5	50	40	80	19	40	21.5	6	M6	35	156	267	227	312	131	106	23	58	106
TM 90 S	140	100	14	130	174	11.5	56	50	90	24	50	27	8	M8	40	172	292	242	347	136	106	25.5	60	106
TM 90 L	140	125	15	155	177	11.5	56	50	90	24	50	27	8	M8	40	172	315	272	370	136	106	25.5	60	106
TM 100	160	140	15	175	190	13	63	60	100	28	60	31	8	M10	50	198	372	312	437	145	106	32.5	69	106
TM 112	190	140	15	175	225	13	70	60	112	28	60	31	8	M10	50	217	380	320	445	154	106	36	70	106

*Note : i*Tolerance fi up to length 85 mm ± 1mm Over 85 mm ± 1.5mm

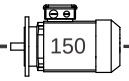

B5 DCB

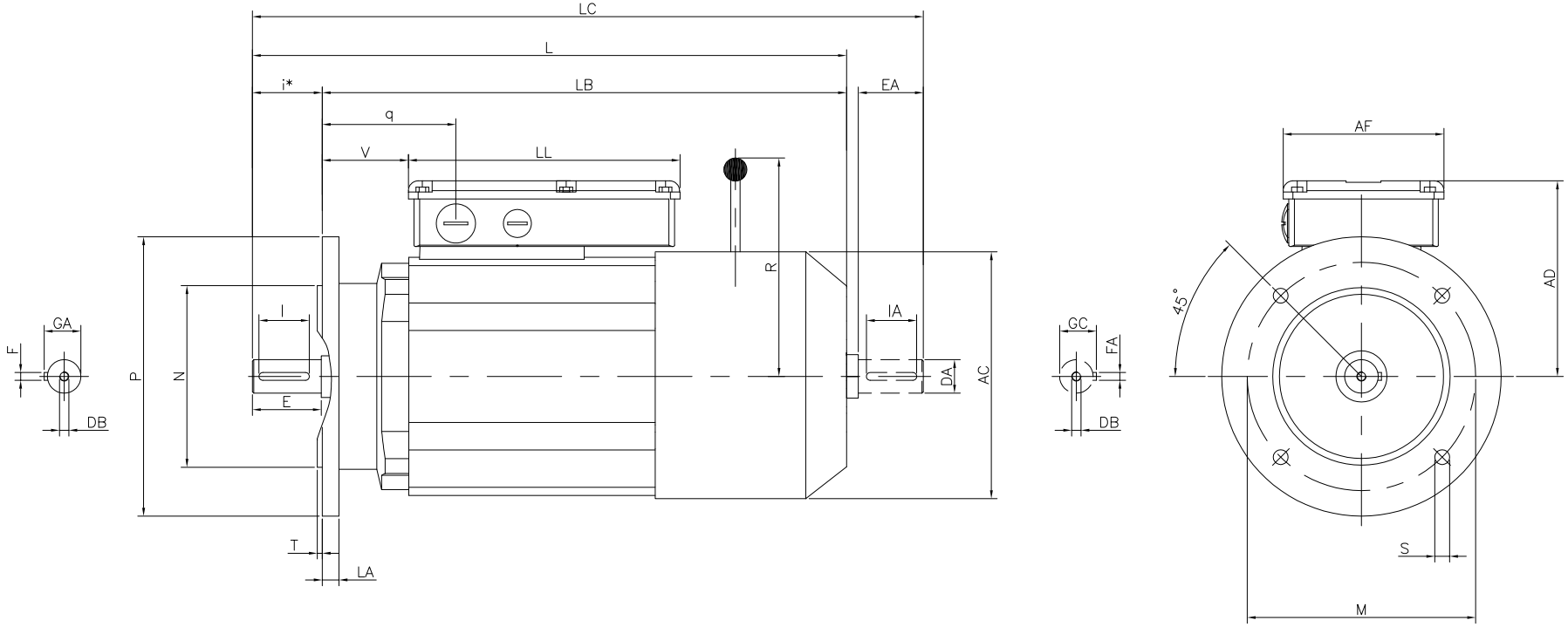

MECHANICAL DIMENSIONS (FLANGE MOUNTED MOTORS- B5 DCB)

Frame	FLANGE							SHAFT						OVERALL DIMENSIONS									
	N	M	P	S	T	i*	LA	D DA	E EA	GA GC	F FA	DB	I IA	AC	L	LB	LC	AD	LL	V	q	AF	R
TM 63	95	115	140	9	3	23	10	11	23	12.5	4	M4	18	120	270	247	298	100	137	12	46	92	120
TM 71	110	130	160	9	3.5	30	10	14	30	16	5	M5	25	140	288	258	323	112	137	23	53	92	130
TM 80	130	165	200	11.5	3.5	40	11.5	19	40	21.5	6	M6	35	156	330	290	375	133.5	152	23.5	58	108	140
TM 90 S	130	165	200	11.5	3.5	50	11.5	24	50	27	8	M8	40	172	365	315	420	136	152	24	60	108	146
TM 90 L	130	165	200	11.5	3.5	50	11.5	24	50	27	8	M8	40	172	386	336	441	136	152	24	60	108	146
TM 100	180	215	250	14	4	60	14	28	60	31	8	M10	50	198	447	387	512	146	152	31	69	108	158
TM 112	180	215	250	14	4	60	15	28	60	31	8	M10	50	217	455	395	520	156	152	33	70	108	168

Note : i Tolerance fi up to length 85 mm ± 1mm Over 85 mm ± 1.5mm

B14 DCB

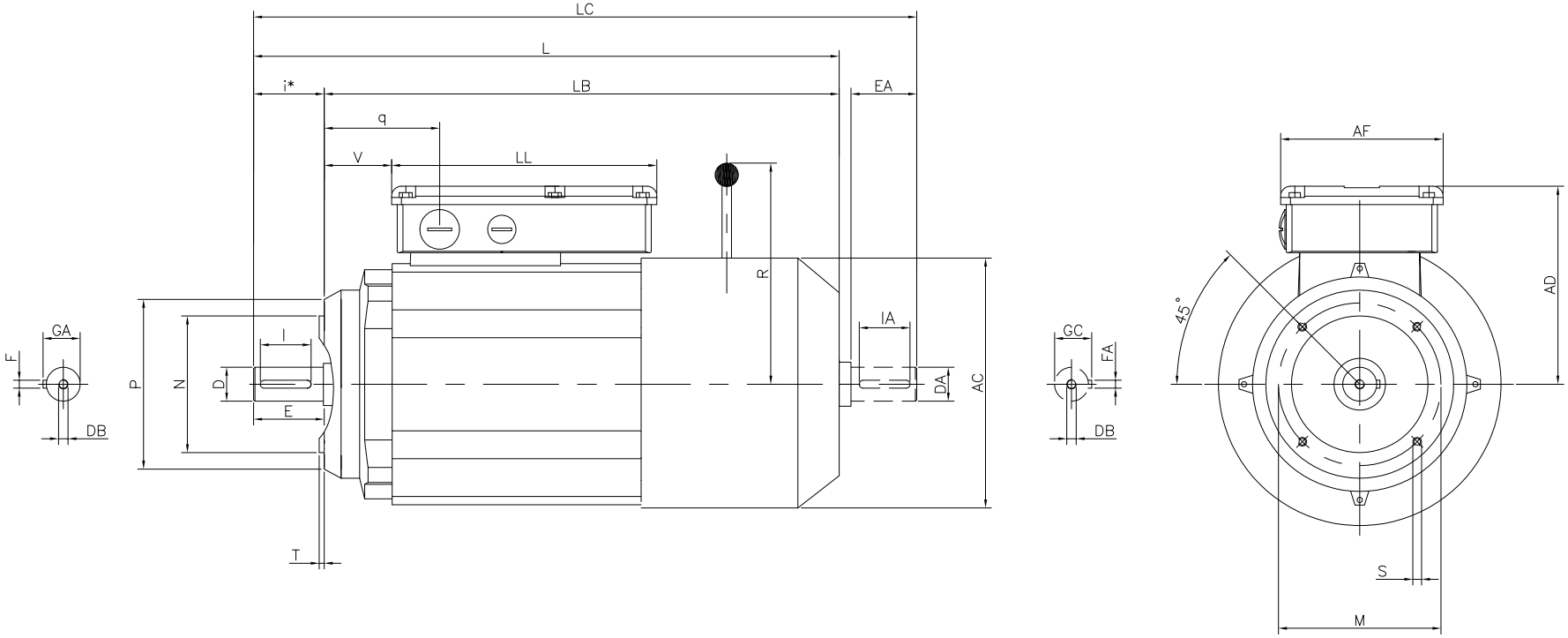

MECHANICAL DIMENSIONS (FLANGE MOUNTED MOTORS- B14 DCB)

Frame	FLANGE						SHAFT						OVERALL DIMENSIONS									
	N	M	P	S	T	i*	D DA	E EA	GA GC	F FA	DB	I IA	AC	L	LB	LC	AD	LL	V	q	AF	R
TM 63	60	75	90	M5x8	2.5	23	11	23	12.5	4	M4	18	120	270	247	298	100	137	12	46	92	120
TM 71	70	85	105	M6x10	2.5	30	14	30	16	5	M5	25	140	288	258	323	112	137	23	53	92	130
TM 80	80	100	120	M6x12	3	40	19	40	21.5	6	M6	35	156	330	290	375	133.5	152	23.5	58	108	140
TM 90 S	95	115	140	M8x15	3	50	24	50	27	8	M8	40	172	365	315	420	136	152	24	60	108	146
TM 90 L	95	115	140	M8x15	3	50	24	50	27	8	M8	40	172	386	336	441	136	152	24	60	108	146
TM 100	110	130	160	M8x15	3.5	60	28	60	31	8	M10	50	198	447	387	512	146	152	31	69	108	158
TM 112	110	130	160	M8x17	3.5	60	28	60	31	8	M10	50	217	455	395	520	156	152	33	70	108	168

*Note : i*Tolerance fi up to length 85 mm ± 1mm Over 85 mm ± 1.5mm

B3 DCB

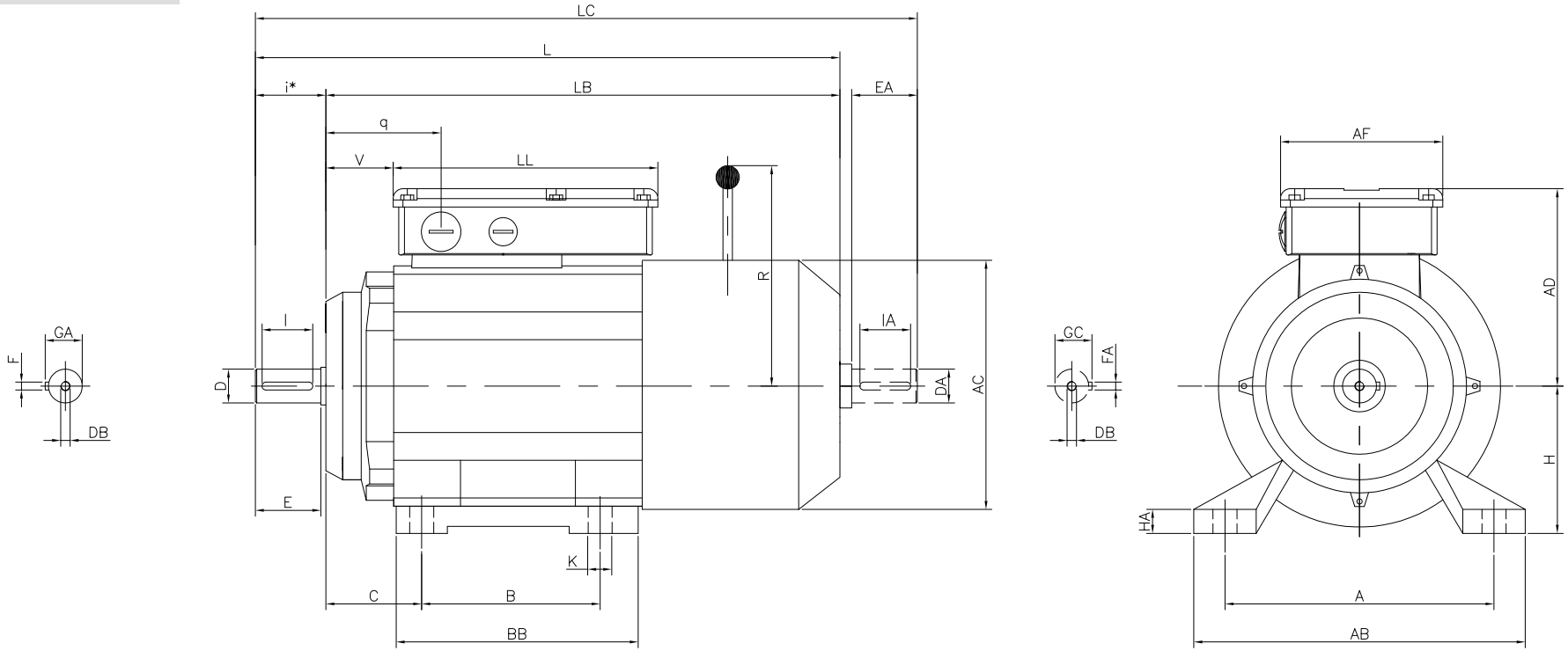

MECHANICAL DIMENSIONS (FOOT MOUNTED MOTORS- B3 DCB)

	FOOT									SHAFT						OVERALL DIMENSIONS									
Frame	A	B	HA	BB	AB	K	C	i*	H	D DA	E EA	GA GC	F FA	DB	I IA	AC	L	LB	LC	AD	LL	V	q	AF	R
TM 63	100	80	9.3	105	125	8	40	23	63	11	23	12.5	4	M4	18	120	270	247	298	100	137	12	46	92	120
TM 71	112	90	9.5	108	140	8	45	30	71	14	30	16	5	M5	25	140	288	258	323	112	137	23	53	92	130
TM 80	125	100	13	125	154	10.5	50	40	80	19	40	21.5	6	M6	35	156	330	290	375	133.5	152	23.5	58	108	140
TM 90 S	140	100	14	130	174	11.5	56	50	90	24	50	27	8	M8	40	172	365	315	420	136	152	24	60	108	146
TM 90 L	140	125	15	155	177	11.5	56	50	90	24	50	27	8	M8	40	172	386	336	441	136	152	24	60	108	146
TM 100	160	140	15	175	180	13	63	60	100	28	60	31	8	M10	50	198	447	387	512	146	152	31	69	108	158
TM 112	190	140	15	175	225	13	70	60	112	28	60	31	8	M10	50	217	455	395	520	156	152	33	70	108	168

*Note : i*Tolerance fi up to length 85 mm ± 1mm Over 85 mm ± 1.5mm